SP10-SM31LR10x

SFP+ 10Gb/s 1310nm 10km Transceiver

PRODUCT FEATURES

- Up to 10.3Gbps
- 10km transmission on SMF
- DFB Laser and PIN-TIA receiver
- 2-wire interface with integrated DDM
- Hot-pluggable SFP+ footprint
- Compliant with SFF-8472, SFF-8431
- Single 3.3V power supply
- Power dissipation < 1.2W
- Case operating temperature:

  Commercial:0°C to +70°C
  Industrial: -40°C to +85°C

APPLICATIONS

- 10GBASE-LR/LW

PRODUCT DESCRIPTION

Photonics Valley's SP10-SM31LR10x SFP+ 10Gbps transceiver is designed to transmit and receive optical data over single mode optical fiber for link length 10km, its electrical interface is compliant to SFI electrical specifications. The transmitter input and receiver output impedance is 100 ohms differential. Data lines are internally AC coupled.

Ordering information

Product part Number	Data Rate (Gbps)	Media	Wavelength (nm)	Transmission Distance(km)	Temperature Range T_{case} / °C	
SP10-SM31LR10C	10.3	SMF	1310	10	0~70	Commercial
SP10-SM31LR10I	10.3	SMF	1310	10	-40~85	Industrial

Absolute Maximum Ratings

Parameter	Symbol	Min	Typ	Max	Unit
Power Supply Voltage	Vcc	-0.5		4	V
Storage Temperature Range	Ts	-40		85	°C
Relative Humidity - Storage	RH_S	0		95	%
Relative Humidity - Operating	RH_O	0		85	%

Recommended Operating Conditions

Parameter	Symbol	Min	Typ	Max	Unit
Case Operating Temperature Range	Tc	0	-	70	°C
		-40	-	85	
Power Supply Voltage	V_{cc}	3.14	3.3	3.46	V
Supply Current	I_{cc}	-	-	300	mA
Data Rate	BR	-	10.3125	-	Gbps

Electrical Interface Characteristics

Parameter	Symbol	Min	Typ	Max	Unit
Transmitter					
Differential Input Voltage Swing	V_{IN}	180	-	700	mV
Tx Differential Input Impendence	Z_{IN}	-	100	-	ohm
Transmitter Disable Voltage	V_{DIS}	2.0	-	V_{CC}+0.3	V
Transmitter Enable Voltage	V_{EN}	0	-	0.8	V
T_{FAULT} Logic High	V_{TFH}	2.4	-	V_{CC}	V
T_{FAULT} Logic Low	V_{TFL}	V_{EE}	-	V_{EE}+0.4	V
Receiver					
Differential output Voltage Swing	V_{OUT}	300	-	850	mV
Rx Differential Output Impendence	Z_{OUT}	-	100	-	ohm
LOS Assert Voltage	V_{LOSA}	2.4	-	V_{CC}	V
LOS De-assert Voltage	V_{LOSD}	V_{EE}	-	V_{EE}+0.4	V

Optical Characteristics

Parameter	Symbol	Min	Typ	Max	Unit	Notes
Transmitter						
Laser Type			DFB			
Center Wavelength Range	λ	1260	1310	1355	nm	
Spectral Width@-20dB	Δλ	-	-	1	nm	
Side Mode Suppression Ratio	SMSR	30	-	-	dB	
Launch Optical Power	Pout	-8.2	-	0.5	dBm	1
Extinction Ratio	ER	3.5	-	-	dB	
Relative Intensity Noise	RIN	-	-	-128	dB/Hz	
Eye Diagram	Complies with IEEE802.3ae eye masks when filtered					
Receiver						
Receiver Type			PIN			
Operating Central Wavelength	λ	1260	-	1610	nm	
Receiver Sensitivity	Sen	-	-	-14.4	dBm	2
Receiver Overload	P_{SAT}	0.5	-	-	dBm	
Receiver Reflectance	RFL	-	-	-12	dB	
LOS Assert	LOSA	-30	-	-	dBm	
LOS De-Assert	LOSD	-	-	-17	dBm	
LOS Hysteresis	LOSH	0.5	3	5	dB	

Notes

1. Average power figures are informative only, per IEEE 802.3ae.
2. Measured with 2^{31}-1 PRBS@10.3125Gbps,BER<10^{-12}

Pin Description

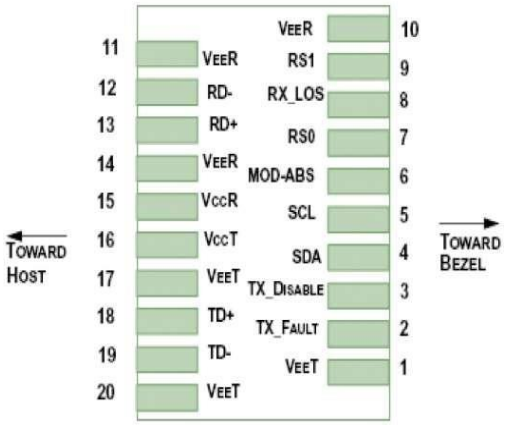

Diagram of Host Board Connector Block Pin Numbers and Name

Pin	Symbol	Description	Notes
1	VEET	Transmitter Ground	1
2	TFAULT	Transmitter Fault	2
3	TDIS	Transmitter Disable. Laser output disabled on high or open	3
4	SDA	2-wire Serial Interface Data Line	2
5	SCL	2-wire Serial Interface Clock Line	2
6	MOD_ABS	Module Absent. Grounded within the module	
7	RS0	Rate Select 0. Not Used.	4
8	RX_LOS	Loss of Signal indication. Logic 0 indicates normal operation	2
9	RS1	Rate Select 1. Not Used.	4
10	VEER	Receiver Ground	1
11	VEER	Receiver Ground	1
12	RD-	Receiver Inverted DATA out. AC Coupled.	
13	RD+	Receiver Non-inverted DATA out. AC Coupled.	
14	VEER	Receiver Ground	1
15	VCCR	Receiver Power Supply	
16	VCCT	Transmitter Power Supply	
17	VEET	Transmitter Ground	1
18	TD+	Transmitter Non-Inverted DATA in. AC Coupled.	
19	TD-	Transmitter Inverted DATA in. AC Coupled.	
20	VEET	Transmitter Ground	1

Notes

1. Circuit ground is internally isolated from chassis ground.
2. Shall be pulled up with 4.7k-10k Ohms to a voltage between 3.15V and 3.6V on the host board.
3. Laser output disabled on T_{DIS} >2.0V or open, enabled on T_{DIS} <0.8V.
4. Internally pulled down per SFF-8431 Rev 4.1.

★ Recommended Host Board Supply Filtering Circuit

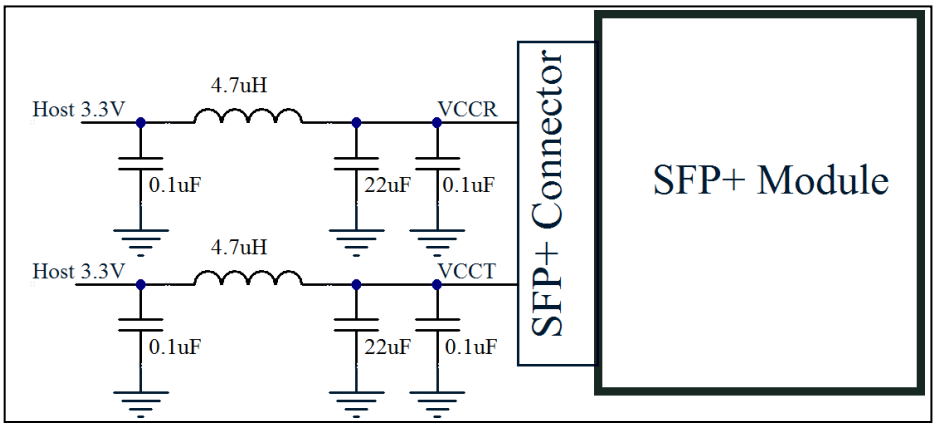

Recommended Interface Circuit

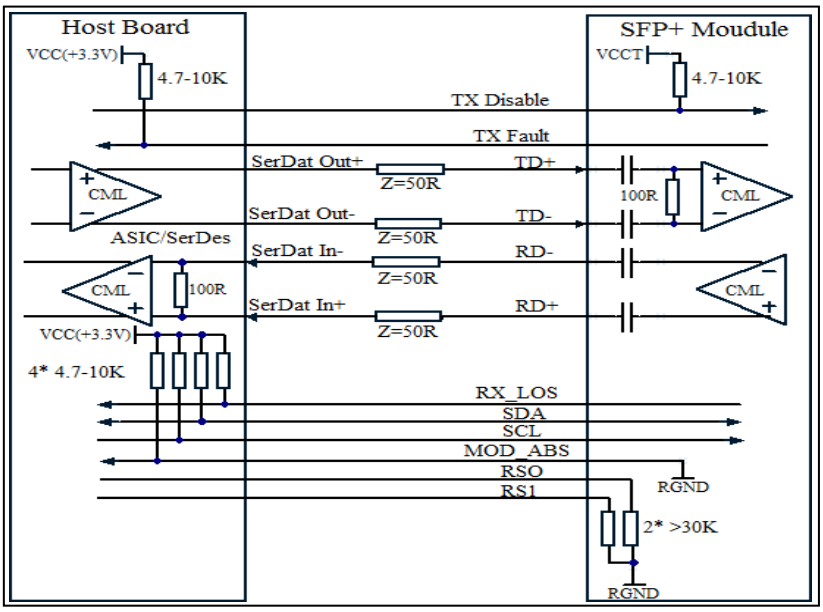

Machnical Dimensions

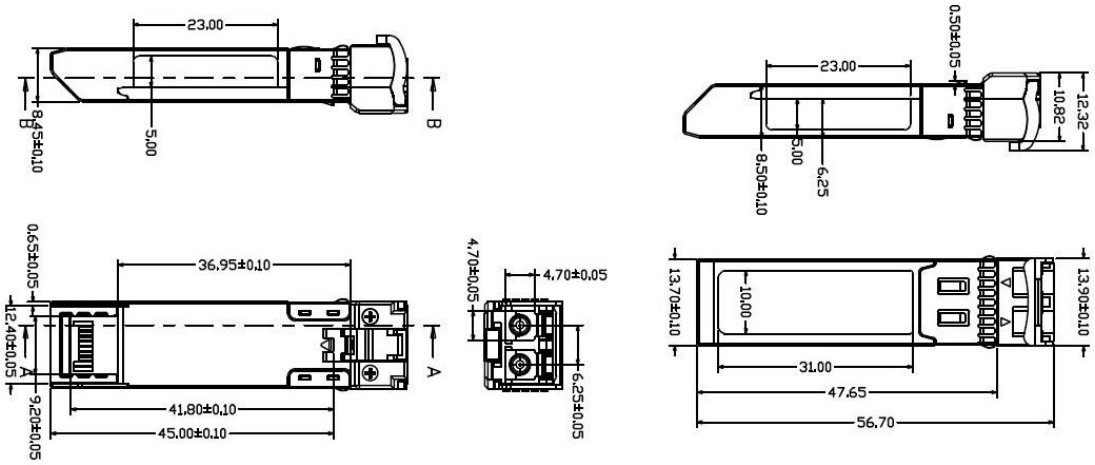

Regulatory Compliance

Feature	Reference	Performance
Electrostatic discharge（ESD）	IEC/EN 61000-4-2	Compatible with standards
Electromagnetic Interference (EMI)	FCC Part 15 Class B EN 55022 Class B (CISPR 22A)	Compatible with standards
Laser Eye Safety	IEC/EN 60825-1, 2	Class 1 laser product
ROHS	2002/95/EC	Compatible with standards
EMC	EN61000-3	Compatible with standards